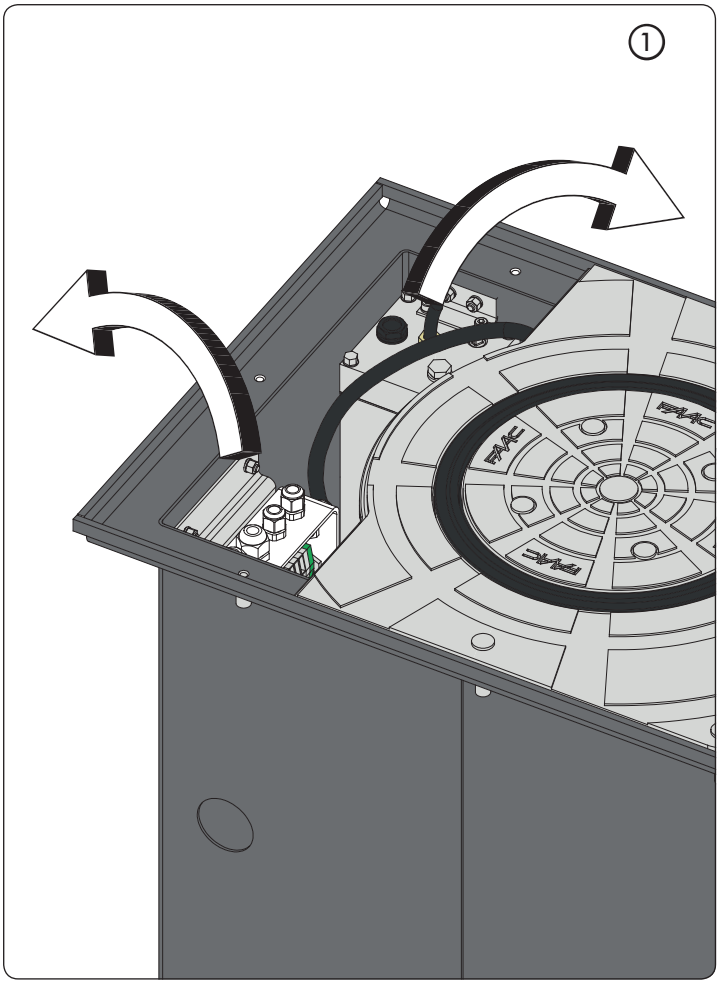
1

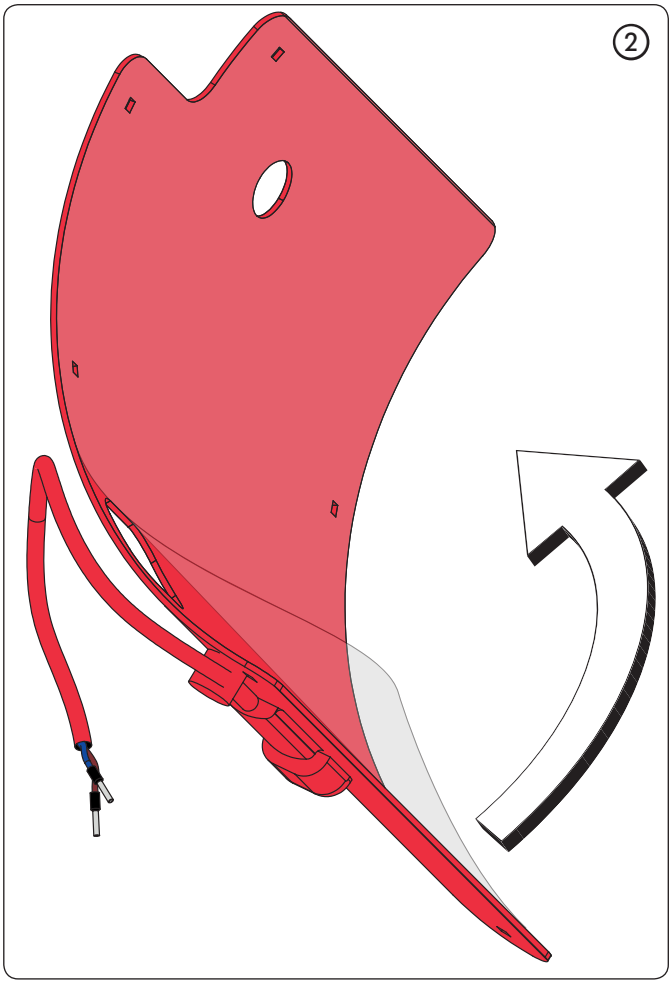
2

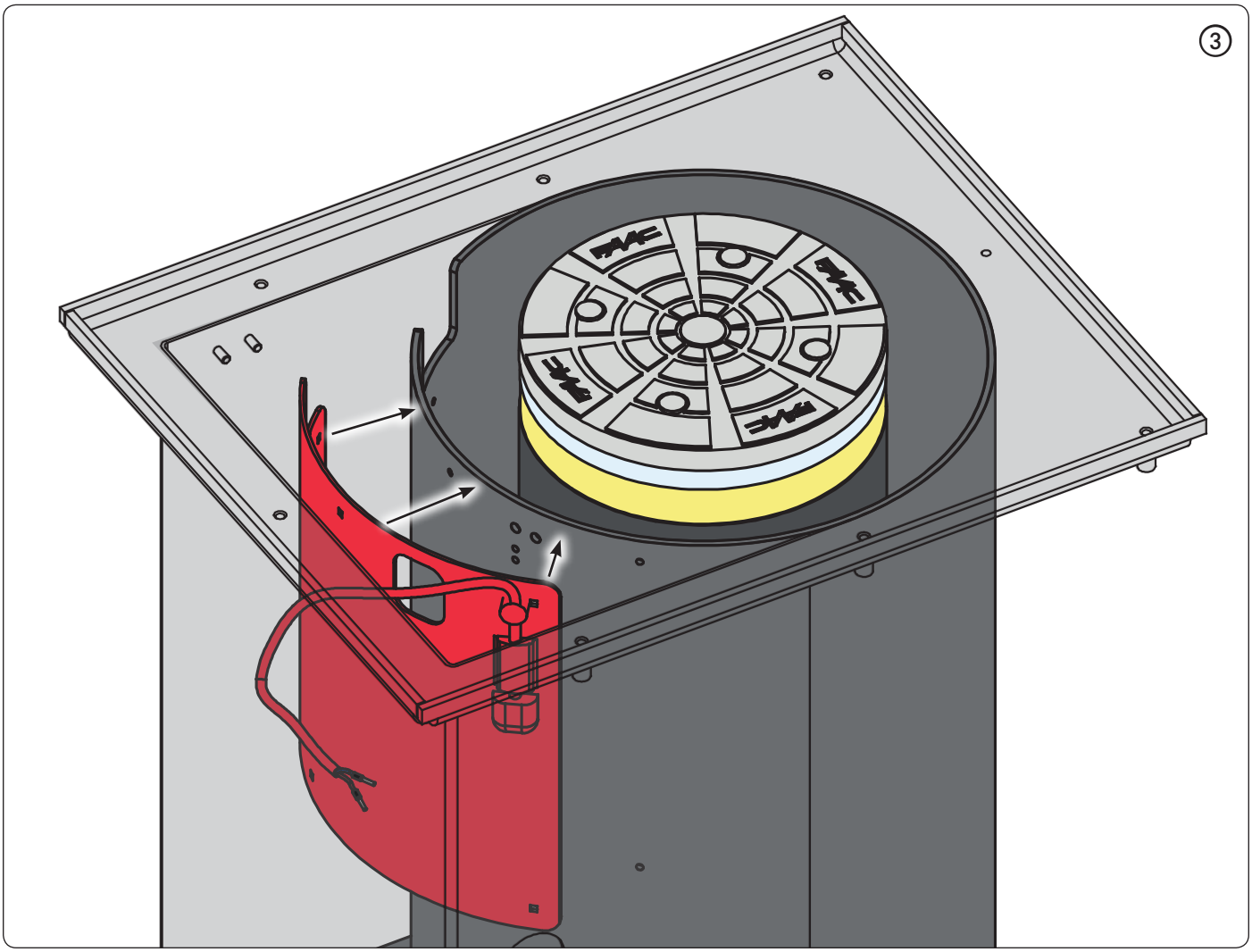
3

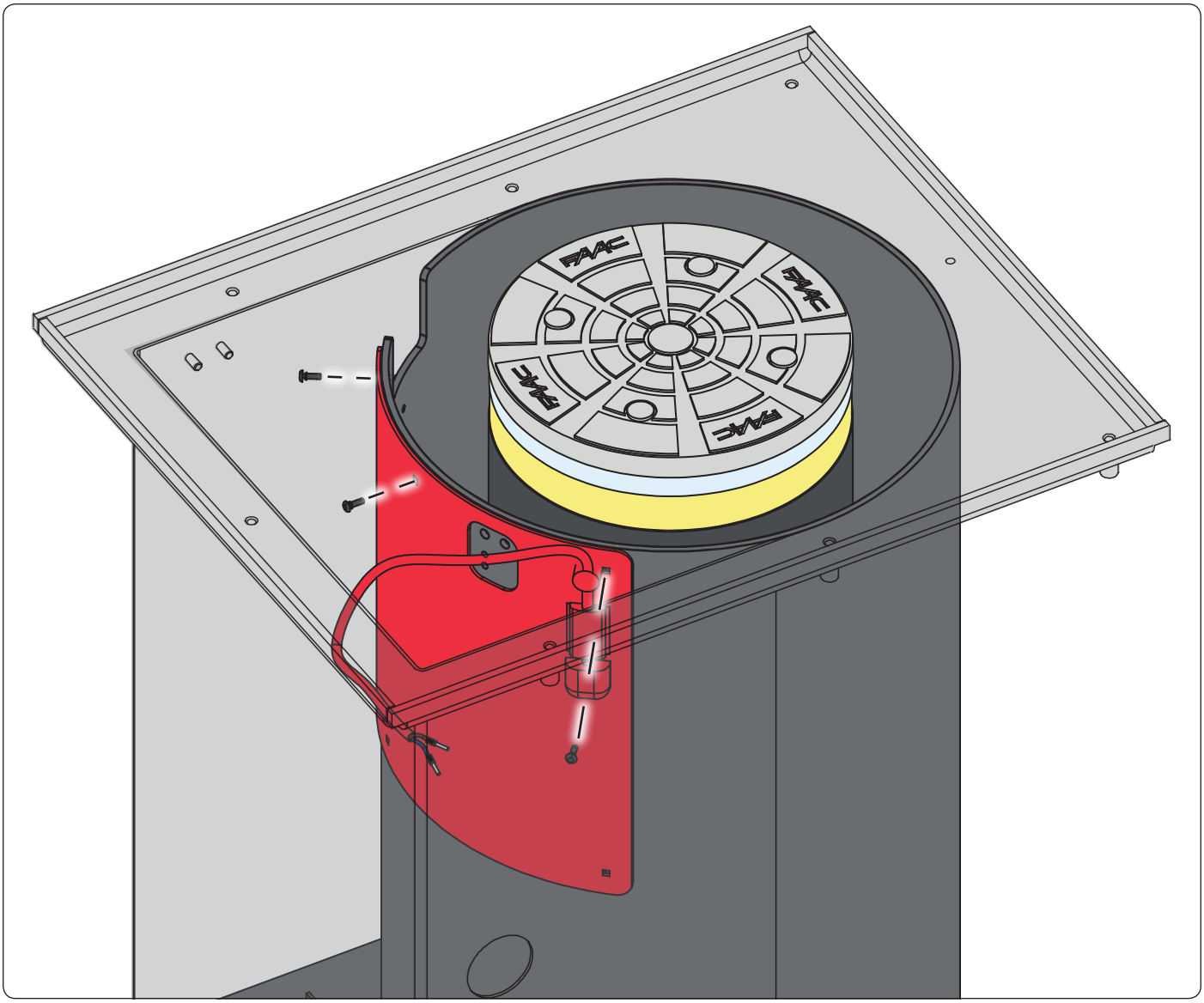

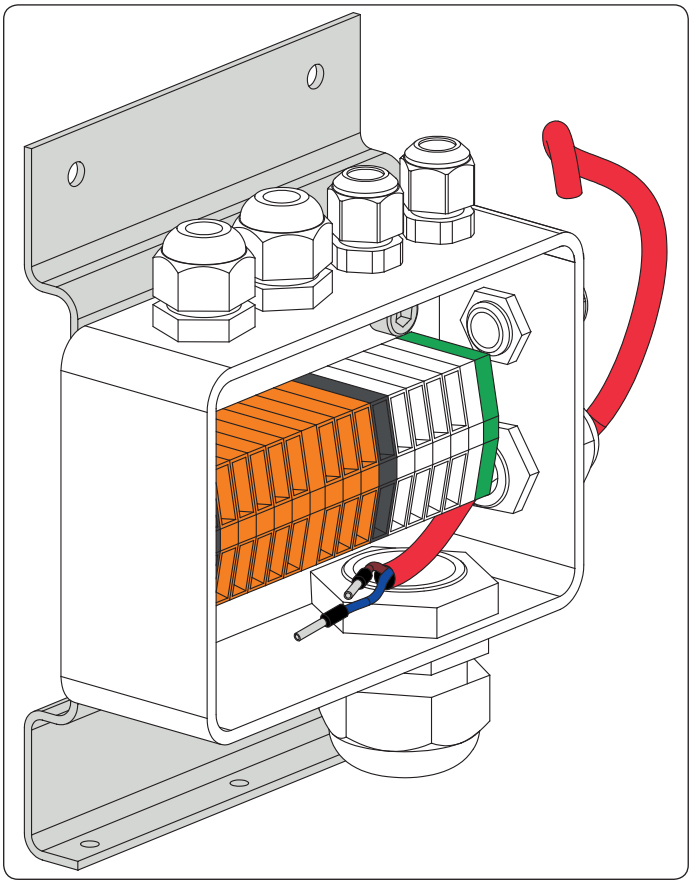

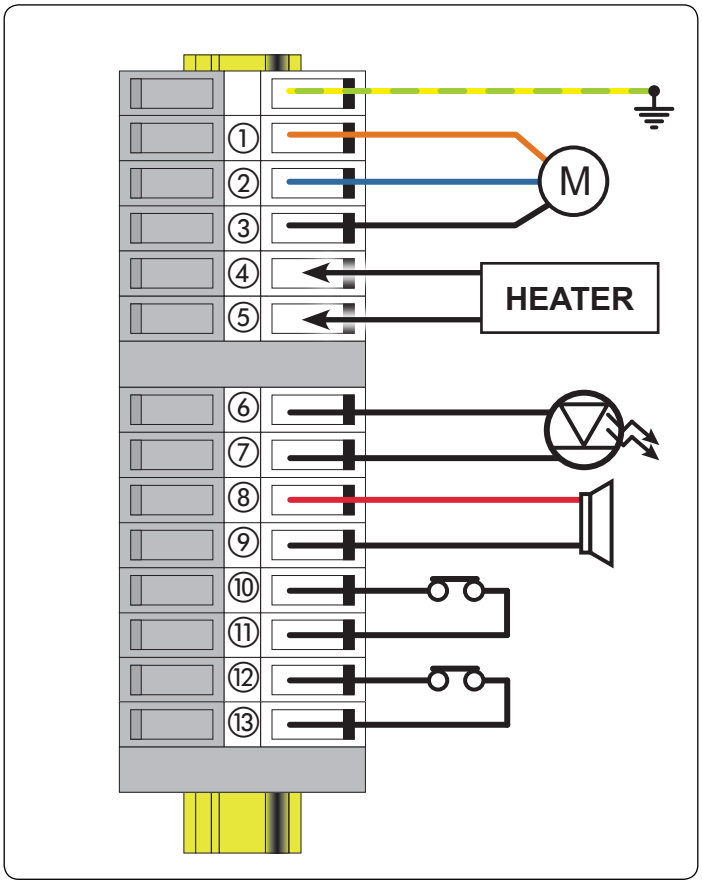
1
2
3
4
5
6
7
8
9
10
11
12
13
M
HEATER