Kit supporto fotocellula - Support kit photocell - Support kit photocellule
Fotocélula kit de apoyo - Support-Kit Fotozelle - Support kit fotocel

00058I0850 rev.0

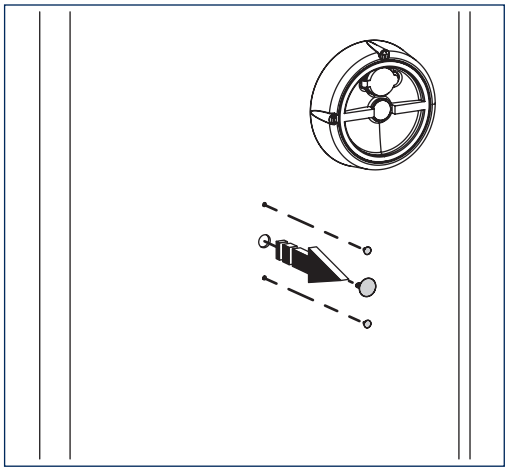

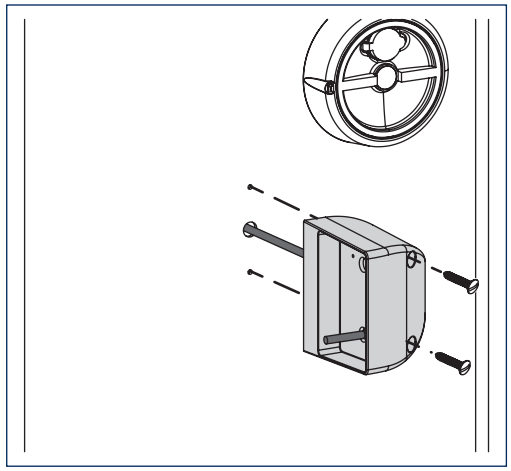

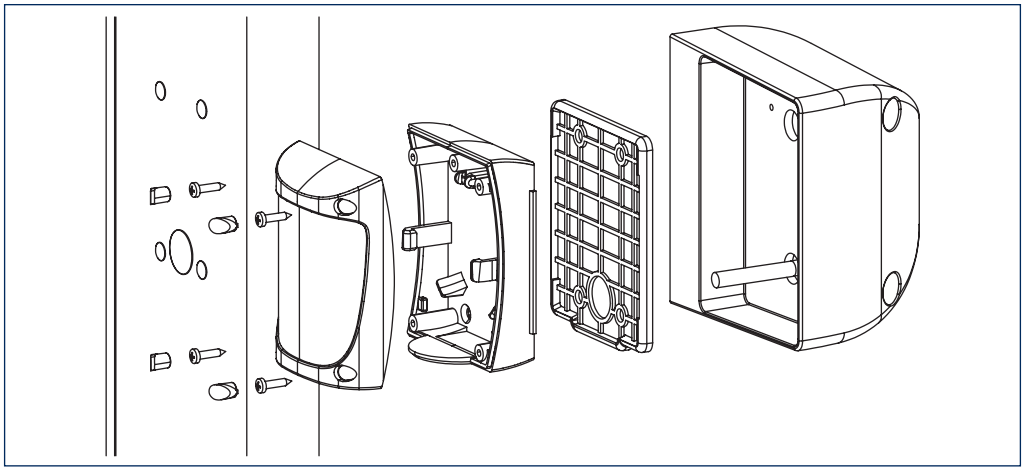

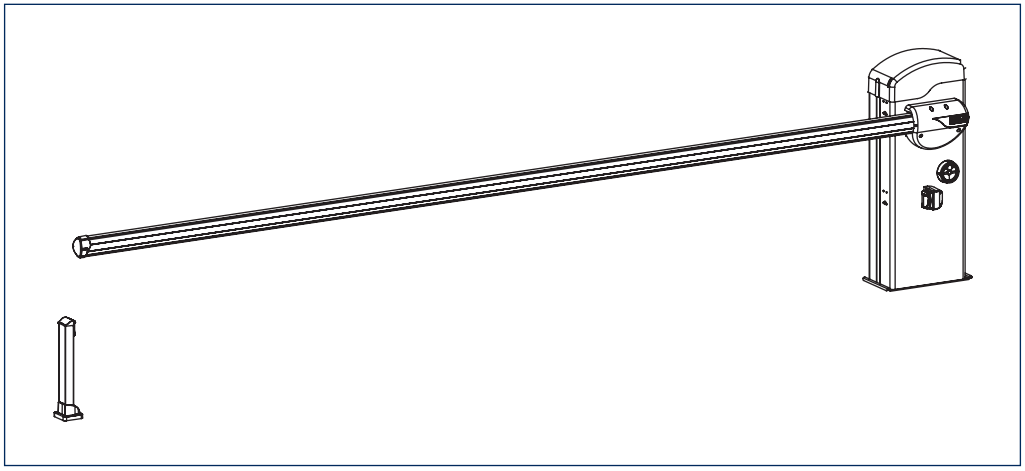

Kit supporto fotocellula - Support kit photocell - Support kit photocellule
Fotocélula kit de apoyo - Support-Kit Fotozelle - Support kit fotocel
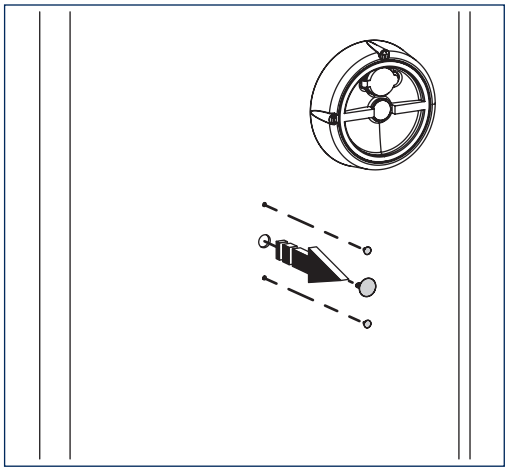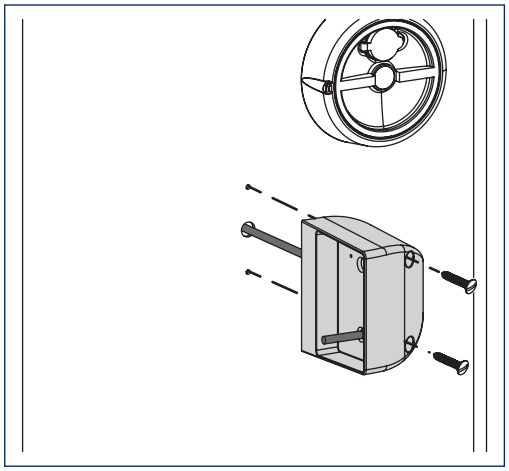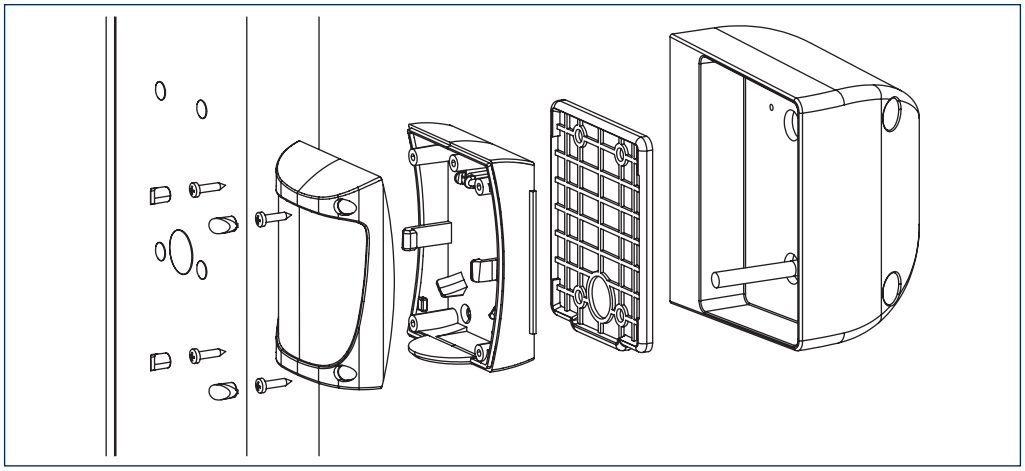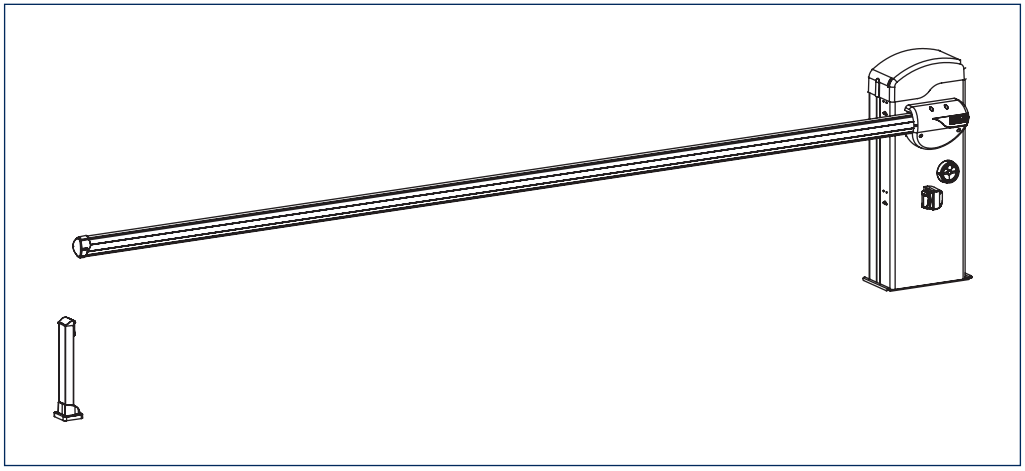
00058I0850 rev.0